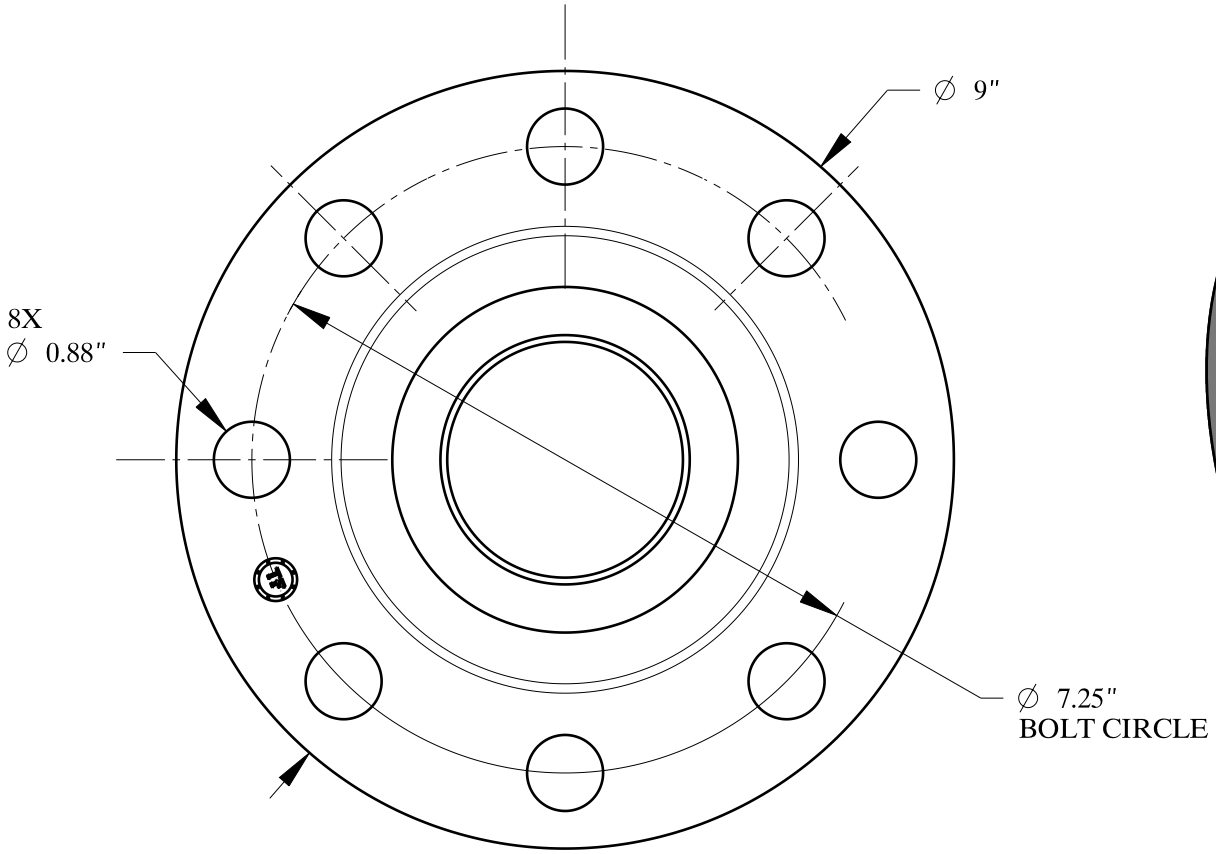

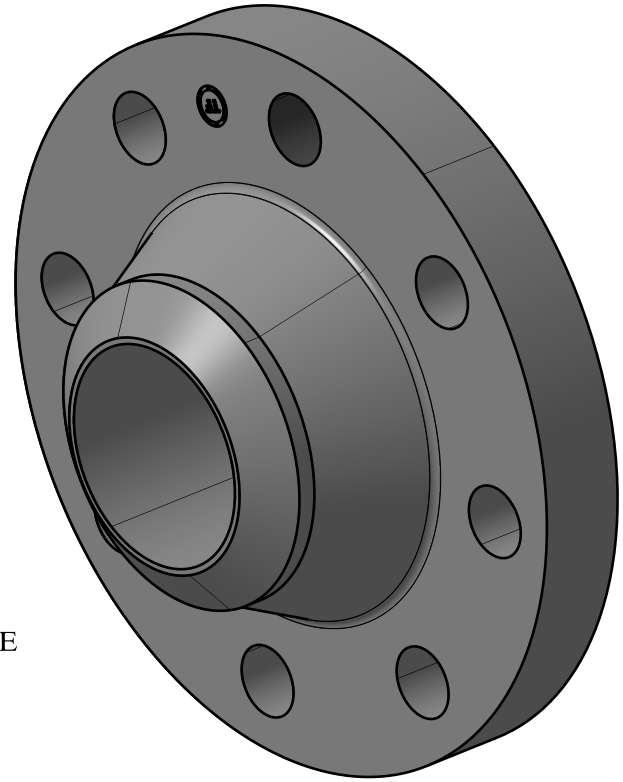

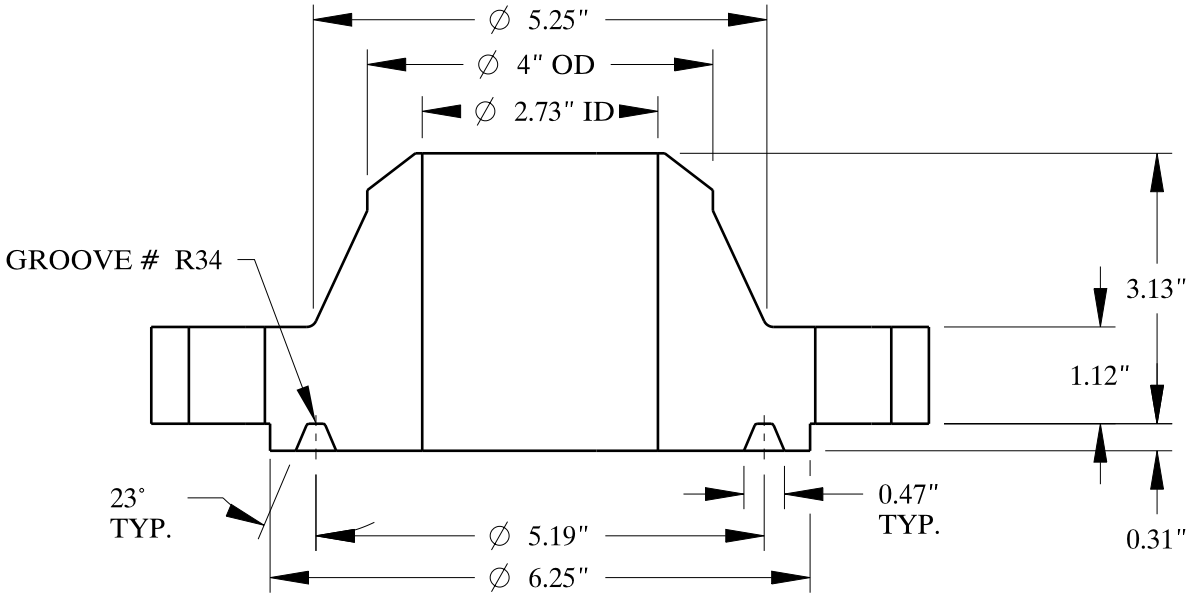

SIZE:	3½" NOM. X SCH: XXH
TYPE:	300-WELD-NECK-RTJ-FLANGE

Texas Flange
PO Box 2889
Pearland, TX 77588
PH: 800-826-3801
FAX: 281-484-8730
www.texasflange.com