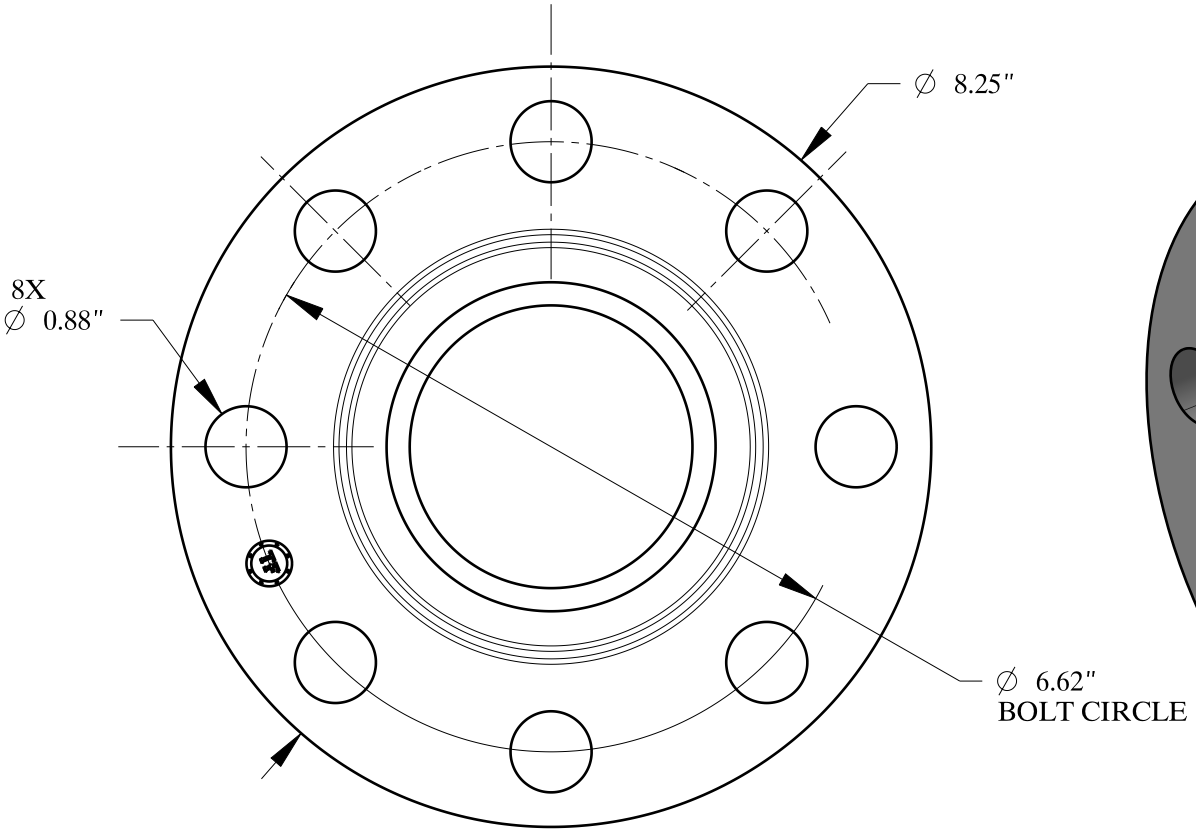

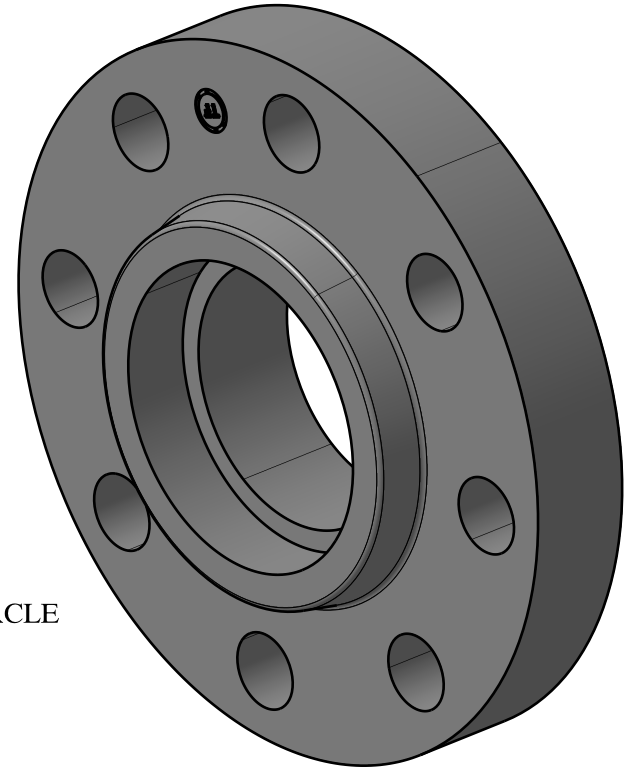

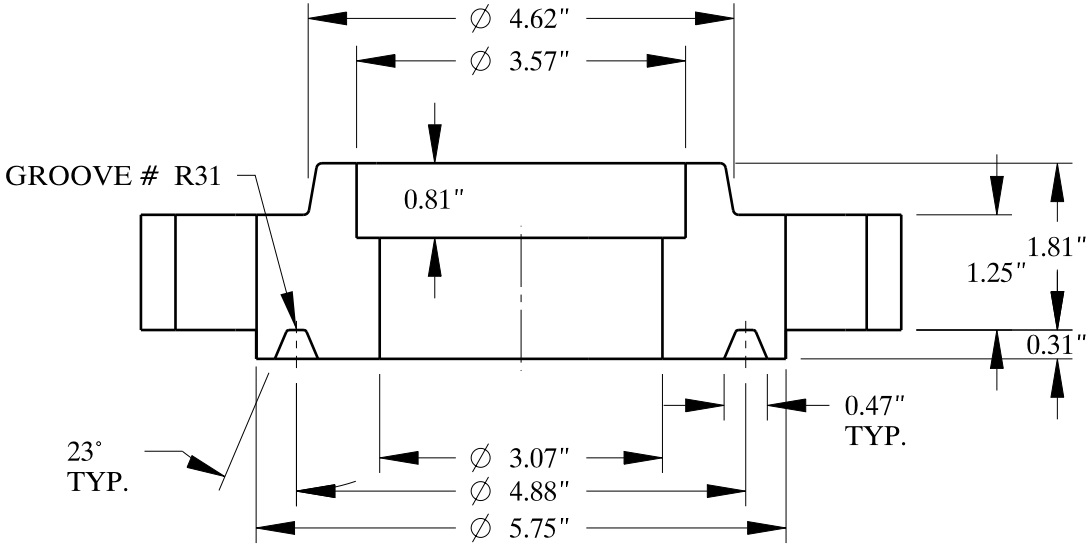

SIZE:	3" NOM. X SCH: STD
TYPE:	600-SOCKET-WELD-RTJ-FLANGE

Texas Flange
PO Box 2889
Pearland, TX 77588
PH: 800-826-3801
FAX: 281-484-8730
www.texasflange.com