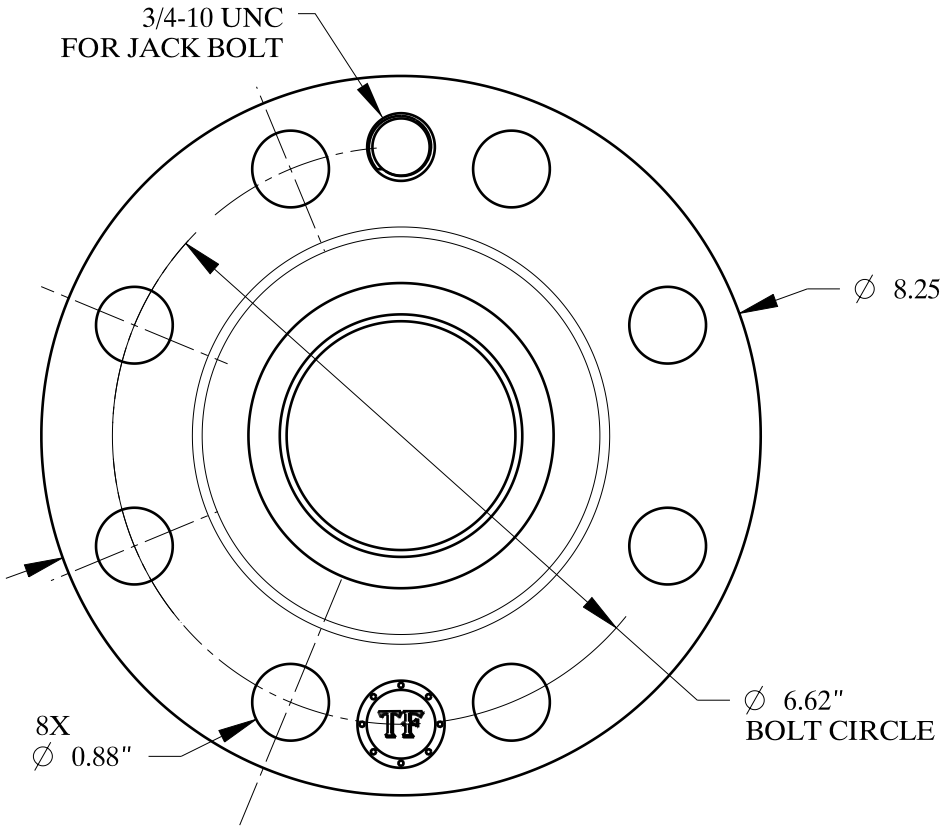

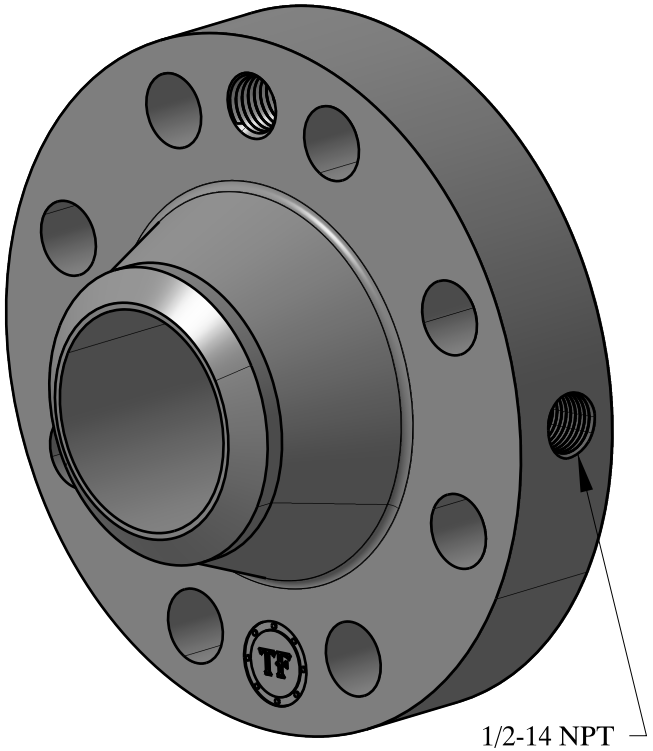

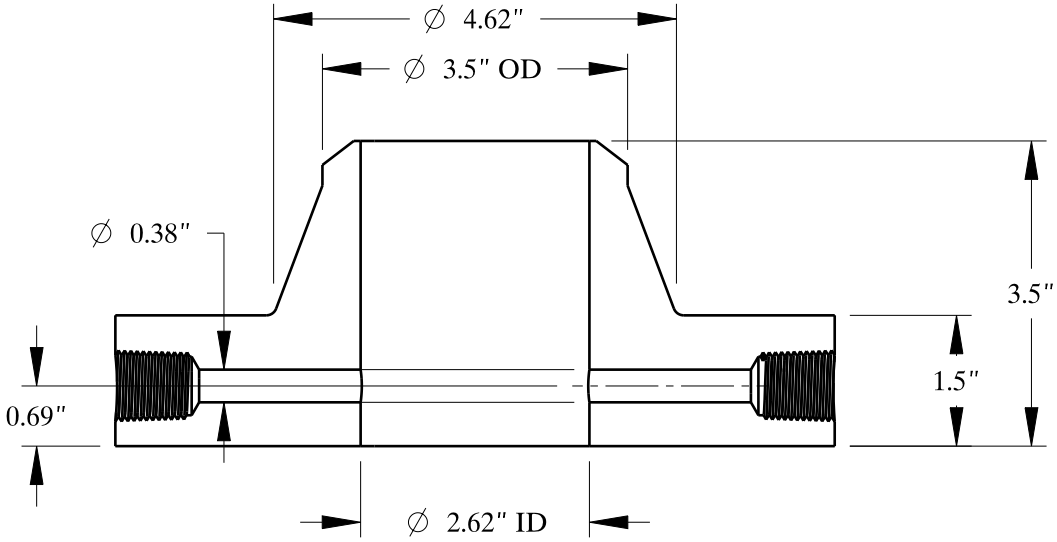

SIZE:	3" NOM. X SHC: 160
TYPE:	600-FF-WELD-NECK-ORIF-FLANGE

Texas Flange
PO Box 2889
Pearland, TX 77588
PH: 800-826-3801
FAX: 281-484-8730
www.texasflange.com