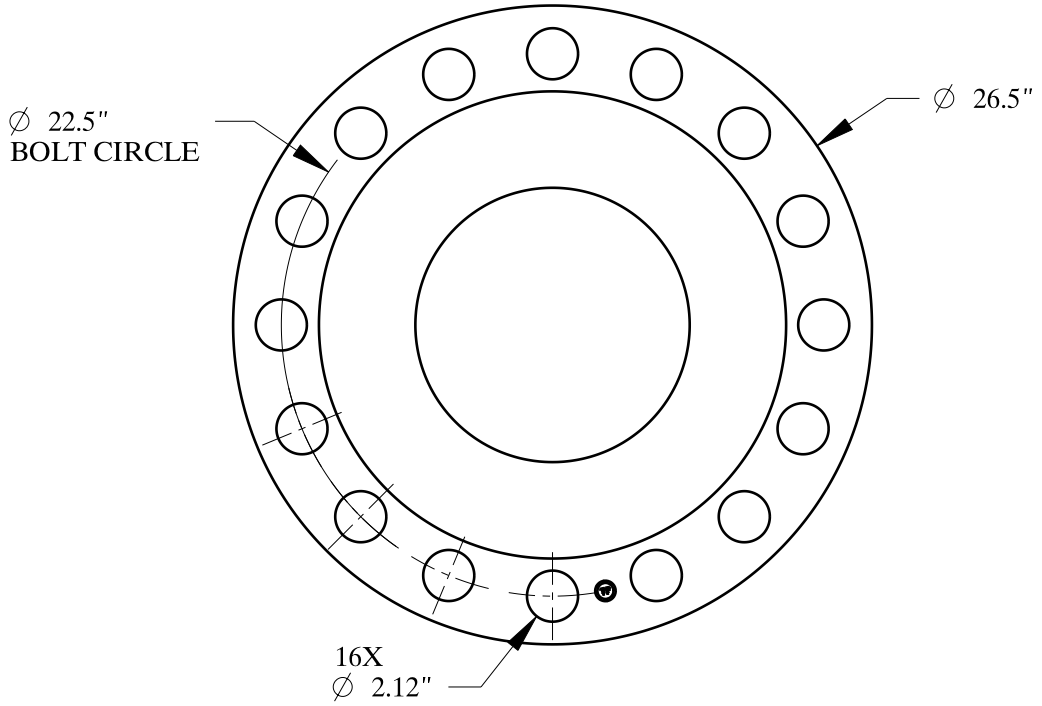

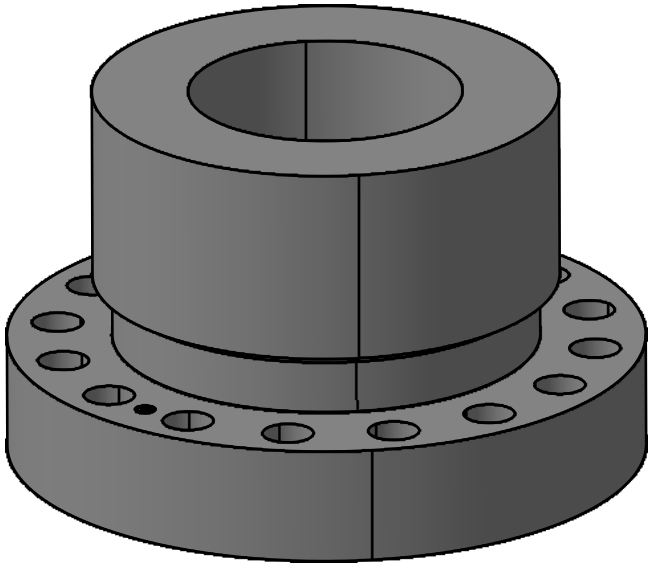

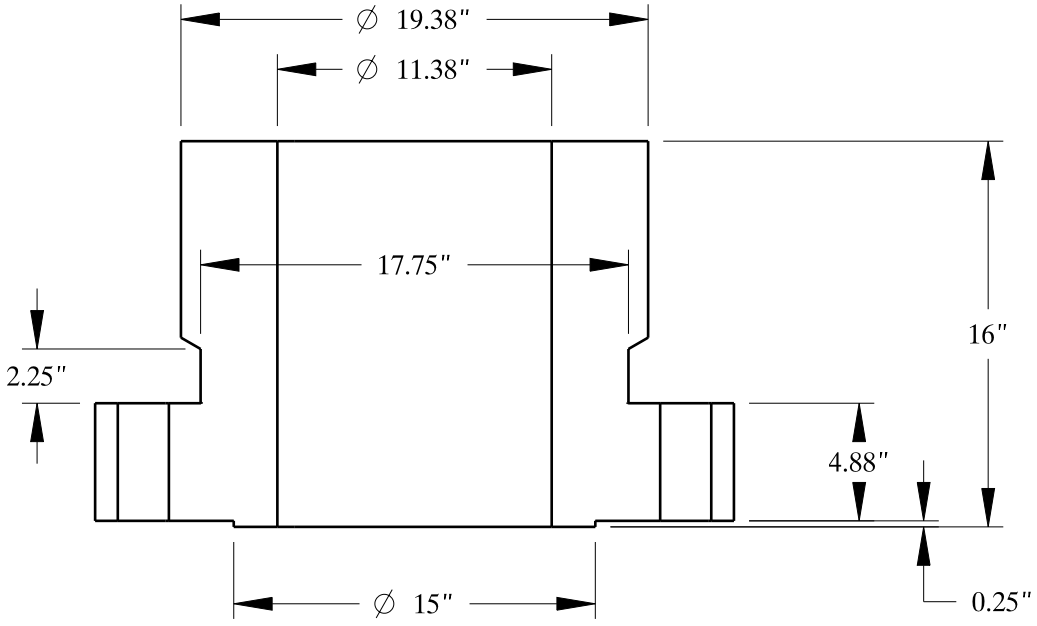

SIZE:	NOM. PIPE SIZE 12 INCH
TYPE:	1500-HB-RF-STD-CONN-FLANGE

Texas Flange
PO Box 2889
Pearland, TX 77588
PH: 800-826-3801
FAX: 281-484-8730
www.texasflange.com