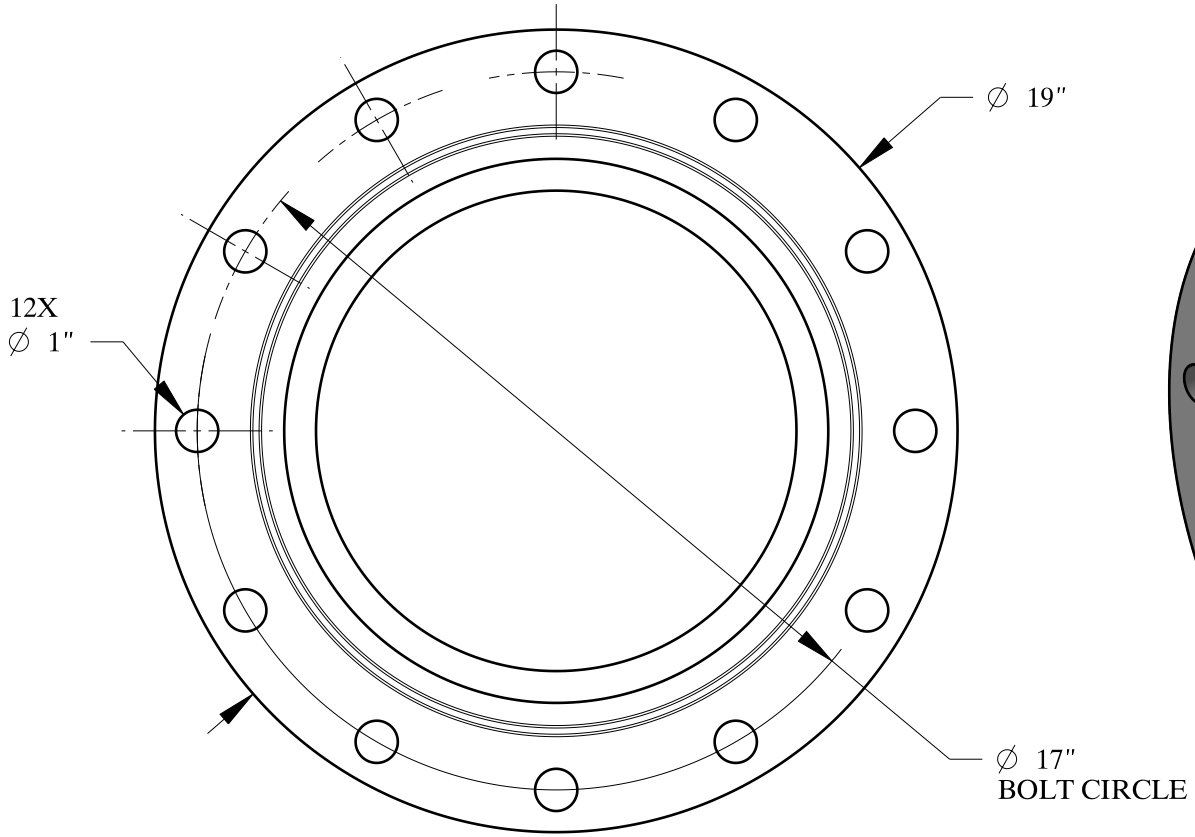


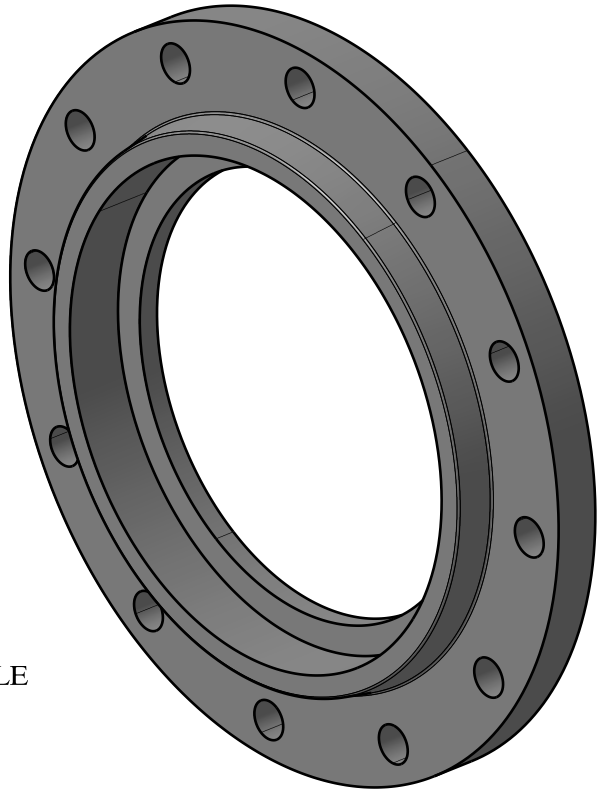

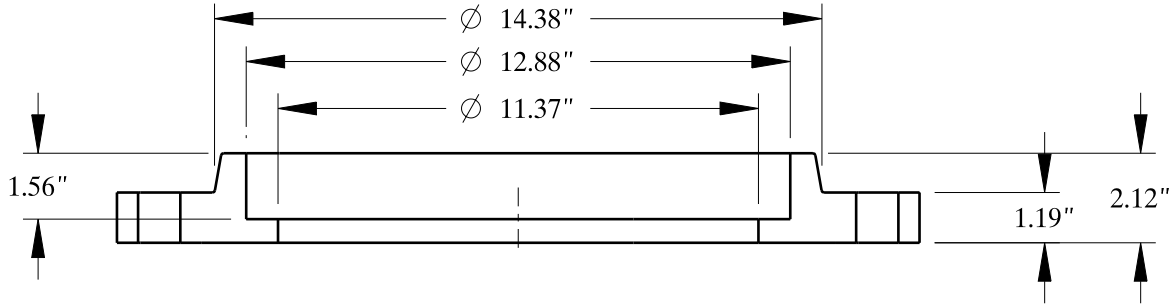


| | |
|---|---|
| SIZE: | 12" NOM. X SCH: 80 |
| TYPE: | 150-SOCKET-WELD-FF-FLANGE |

Texas Flange
PO Box 2889
Pearland, TX 77588
PH: 800-826-3801
FAX: 281-484-8730
www.texasflange.com